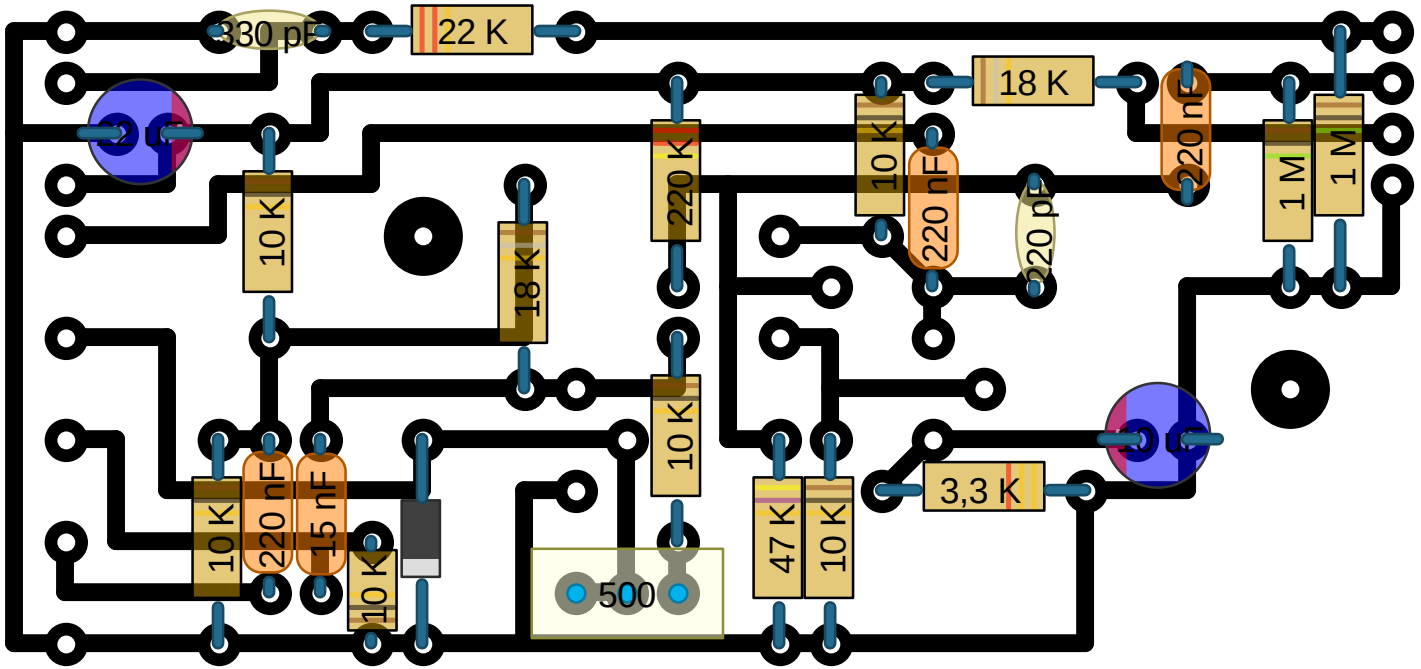

www.turretboard.org