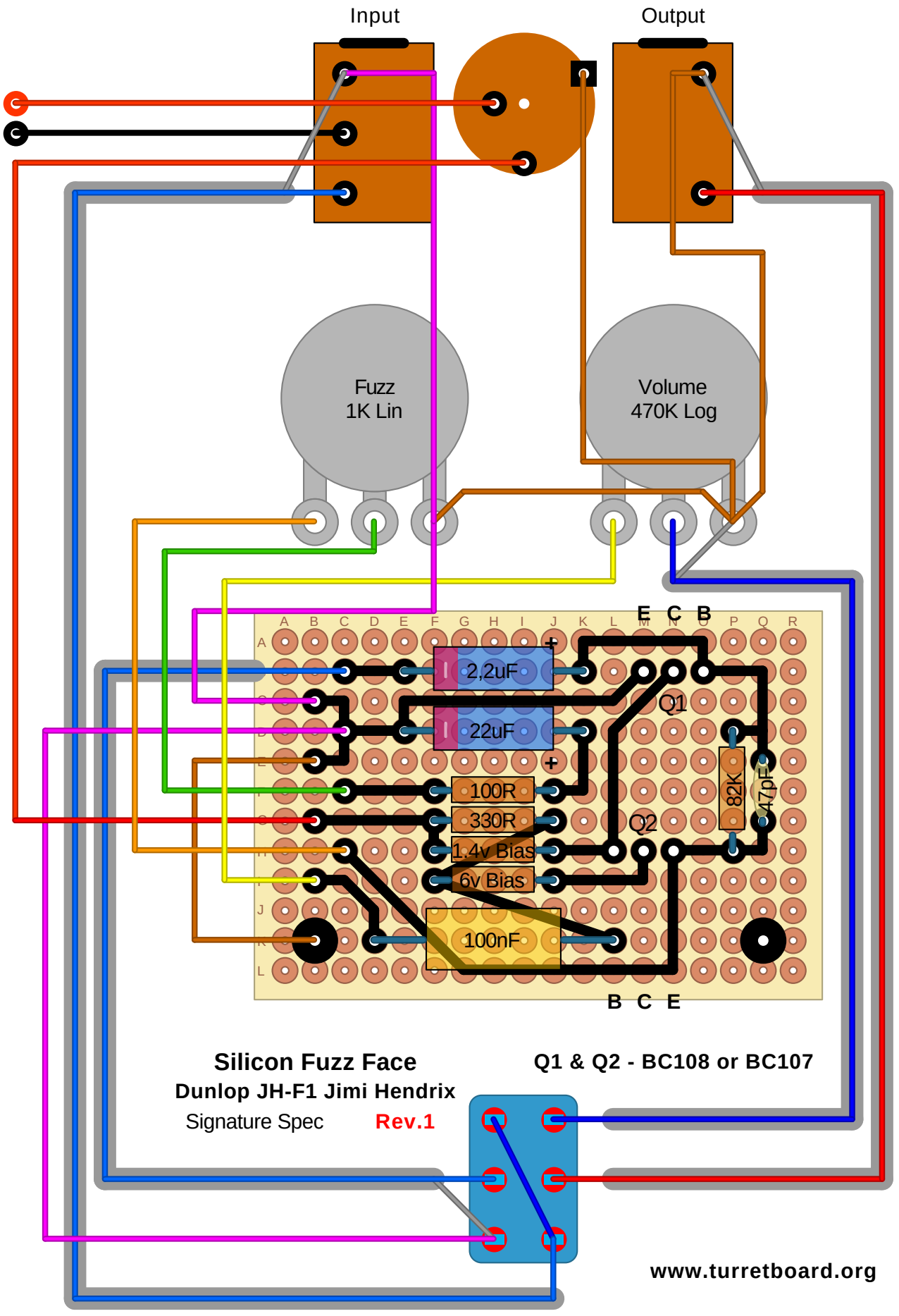
Input
Output
Fuzz
1K Lin
Volume
470K Log
E C B
2,2uF
22uF
Q1
100R
330R
1.4v Bias
6v Bias
Q2
82K
47pF
100nF
B C E
Silicon Fuzz Face
Dunlop JH-F1 Jimi Hendrix
Signature Spec
Rev.1
Q1 & Q2 - BC108 or BC107
www.turretboard.org