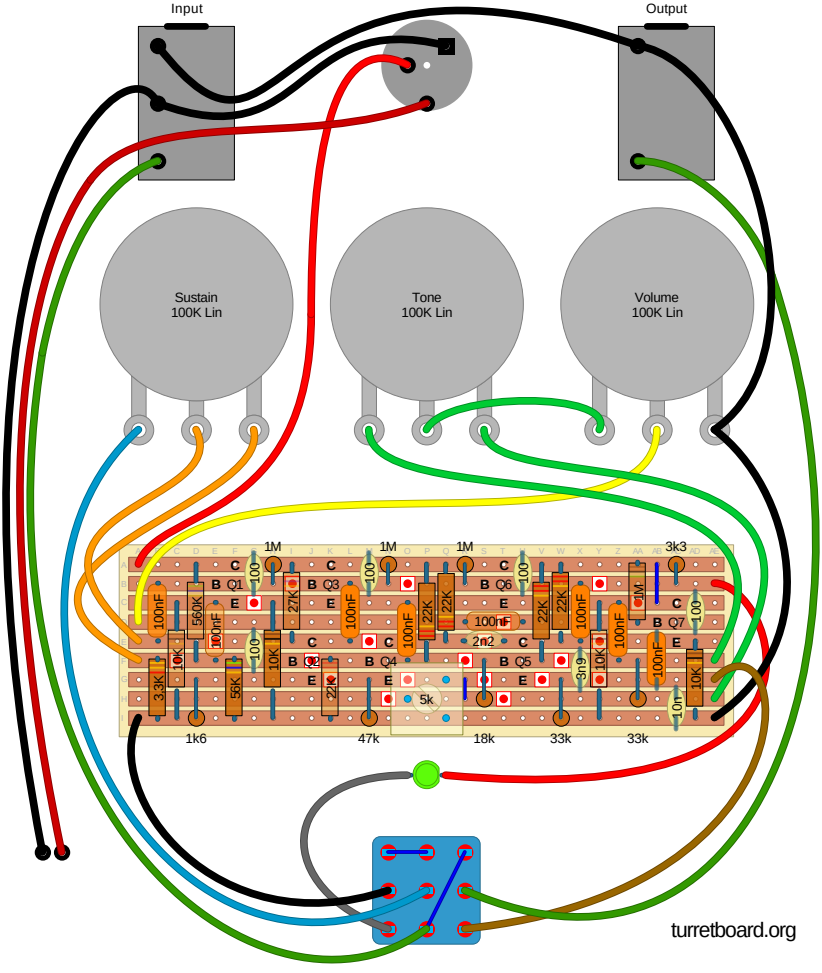Jen (Gretsch Playboy) - Harmon Booster